HANDBOOK OF RADIO EQUIPMENT

Standard Telephones and Cables Limited

STANDARD TELEPHONES AND CABLES LIMITED

QUARTZ CRYSTAL DIVISION

HARLOW,

ESSEX,

ENGLAND.

HIGH STABILITY FREQUENCY SOURCE

TYPE 90 LQE 812A

HIGH STABILITY FREQUENCY SOURCE TYPE 90-LQE-812A

CONTENTS

Section			Page
	SPECIFICATION		3
1.	GENERAL DESCRIPTION		
	1.1	Introduction	4
	1.2	Frequency Source Description	4
2.	CIRCUIT DESCRIPTION		
	2.1	Oscillator	5
	2.2	Power Supply	5
3.	OPERATION AND MAINTENANCE		
	3.1	Operation	6
	3.2	Maintenance	6
	PARTS LIST		7

LIST OF ILLUSTRATIONS

Circuit Diagram	90-LQE-812A	Sheet 7.1.
Front Panel Pin Connections	90-LQE-812A	" 10.1.

HIGH STABILITY FREQUENCY SOURCE 90-LQE-812A

Specification:

Nominal Frequency	5 Mc/s.
Maximum frequency change over the operating temperature range	2.10^{-7}.
Operating temperature range	0° to $+40^{\circ}$C.
Period from switching on to achieve the specified short term stability	12 hours.
Ageing	Less than 1.10^{-8} per day.
Output voltage - open circuit	Not less than 50 mV r.m.s.
Nominal crystal operating temperature	50°C.
Power supply	12.6V A.C. or D.C. 0.7 Amp. Nominal.
Required regulation of Power Supply	12.6V $\pm$10%.
Dimensions	Diameter - 3 inches.
	Seated height - 6 inches.

Under conditions of constant ambient temperature and supply voltage, the short term frequency stability is 1 or 2 parts in 10^{8}.

NOTE: THIS EQUIPMENT MUST NOT BE STORED OR OPERATED AT TEMPERATURE OUTSIDE -20° to $+50^{\circ}$C.

HIGH STABILITY FREQUENCY SOURCE TYPE 90 LQE 812A

SECTION 1.

GENERAL DESCRIPTION

1.1. INTRODUCTION

The high stability source Type 90 LQE 812A is a transistorised unit with a frequency stability of better than 2 parts in 10^7 over an operating range of $0^{\circ}C$ to + $40^{\circ}C$. The short term stability of the oscillator, measured every 20 seconds over the period of 30 minutes, under conditions of constant ambient temperature and supply voltage will be better than 2 parts in 10^8, and may be considerably better than this figure. The mean frequency shift during a 24 hour period will not exceed 1 part in 10^8, and this ageing rate will rapidly decrease to a few parts in 10^9 per day. To reduce this drift rate to 1 part in 10^9 per day it is necessary to operate the source continuously under conditions of constant ambient temperature and supply voltage.

The unit may be mounted in any position, and is intended for normal mobile use. The total power required is 9 watts maximum.

1.2. Frequency Source Description

The source consists of a self-contained crystal oscillator mounted in a closely temperature controlled oven together with the oven control circuit, and built in power supply unit.

The oscillator and power supplies are mounted on printed circuit boards and are located one at each end of the oven unit. The oscillator circuit is contained in a secondary temperature controlled space of the main oven in order to minimise the effect of ambient temperature changes on the transistors.

The crystal oven temperature is controlled by a contact thermometer which is a robust component and capable of withstanding shocks well in excess of 50 g. This thermometer is connected to a transistor which delivers power to the oven heater. The precise temperature is determined by means of a selected shunt resistance connected across a separate contact thermometer heating winding.

Oven cycling is indicated by a 6 volt, 0.04 amp pilot lamp which must be connected between pins 2 and 7 on the front panel.

HIGH STABILITY FREQUENCY SOURCE TYPE 90-LQE-812A

SECTION 2

CIRCUIT DESCRIPTION

2.1 OSCILLATOR

The quartz crystal oscillator consists of an S.T. & C. 5 Mc/s 5th overtone AT-cut crystal having a Q value in excess of two million, which is maintained in oscillation at a very low drive level by a single transistor circuit ZR2. A transistor buffer amplifier output Stage XR3 is mounted on the same printed circuit board, and the output circuit is connected to pins 8 and 9, (earth).

Precise frequency adjustment may be made by connection of an external good quality air-spaced 50pF trimmer capacitor across pins 3 and 4, which must not be earthed. It is thus possible to offset the effects of crystal ageing.

After a long period of operation the output amplitude may require slight adjustment. A small potentiometer VR1 is used for this purpose and is mounted under an inspection hole in the front panel.

2.2 POWER SUPPLY

The power supply is mounted furthermost from the front panel, and contains a silicon diode rectifier bridge network and two stages of Zener diode stabilisation to provide isolation from mains supply variations. The oven heater power transistor XR1 is also mounted on this board. A 1 amp fuse is incorporated in the supply line and is located in the centre of the front panel.

SECTION 3

OPERATION AND MAINTENANCE

3.1 OPERATION

The connections to the source are as follows:

1.	No connection.
2.	Oven monitor lamp.
3 and 4.	Frequency pulling trimmer.
5 and 6.	12.6 volts 0.7 amp. A.C.
7.	Negative D.C. and oven monitor lamp.
8.	5 Mc/s output.
9.	Common earth and positive D.C.

For the greatest stability the power supply should have good regulation as the load drawn by the unit varies with the oven heating cycle.

3.2. MAINTENANCE

To achieve the stability claimed in the specification of this unit it is necessary to carry out careful alignment and testing procedures. In view of these difficulties it is recommended that if the need for maintenance does arise the unit should be returned to the manufacturer with an indication of the cause of complaint.

PARTS LIST

C1	500 µF 25 V DCWKG. Plessey type CE1246.
C3	0.01 µF Hunts type W97.
C5	230pF Nom. (Comprising 160pF mica and tubular ceramicon).
C6	Nominal 18pF.
C7	1pF T.C.C. type SD1 and 2pF T.C.C. type SD2 in parallel.
C8	500pF Plessey type Cascap.
C10	0.001 µF Hunts type CPM5A. RCL.136A. 2115812.
C11	0.01 µF Hunts type BM13KV Code 115827.
C12	0.01 µF Hunts " " " "
R1	33 ohms ±10% ½ watt. Erie Type 8.
R2	43 ohms ±10% " " " " "
R3	140 ohms ±5% 1/10 watt. S.T.C. High Stability type 4307C.
R4	1,500 ohms ±5% " " " " " " " "
R5	7,500 ohms ±5% " " " " " " " "
R6	7,500 ohms ±5% " " " " " " " "
R7	10,000 ohms ±5% " " " " " " " "
R8	15,000 ohms ±5% " " " " " " " "
R9	1,000 ohms ±5% " " " " " " " "
R10	560 ohms ±5% " " " " " " " "
R11	5 ohms resistance wire.
R12	33,000 ohms ±5% 1/10 watt S.T.C. high Stability type 4307C.
R14	100 ohms ±5% " " " " " " " "
R15	20 ohms ±10% ½ watt Morganite type S.
R16	8,200 ohms ±10% ½ watt Morganite type S.
XR1	Texas Instrument Transistor type 2N456.
XR2	Mullard Transistor type OC44.
XR3	Mullard Transistor type OC170.
Z1	S.T.C. Zener diode type Z2A62F ±5%.
Z2	" " " " Z2A43F ±5%.
TR1	Neosid output transformer 4:1.
L1	Ferrite toroid pot core type WP3261/FA.
F1-6	Ferroxcude Beads type FX.1115.

ISSUE.
ISSUE. 3 23.1.62 R1 WAS No.
ISSUE 4 27.4.62. XR2 WAS TK 31C CG WAS 8pf R16 ADDED THIS CHANGE CORRESPONDS TO ADDITION OF SUFFIX 'M' TO SERIAL No OF UNIT.
ISSUE 5. 25.6.62. REDRAWN
ISSUE 6.
APPROVED.
CHECKED.
TRACED.
DRAWN. S.R.

POWER SUPPLY 14/LQA/131A

OVEN CONTROL CIRCUIT.

OSCILLATOR 16/LQA/130A.

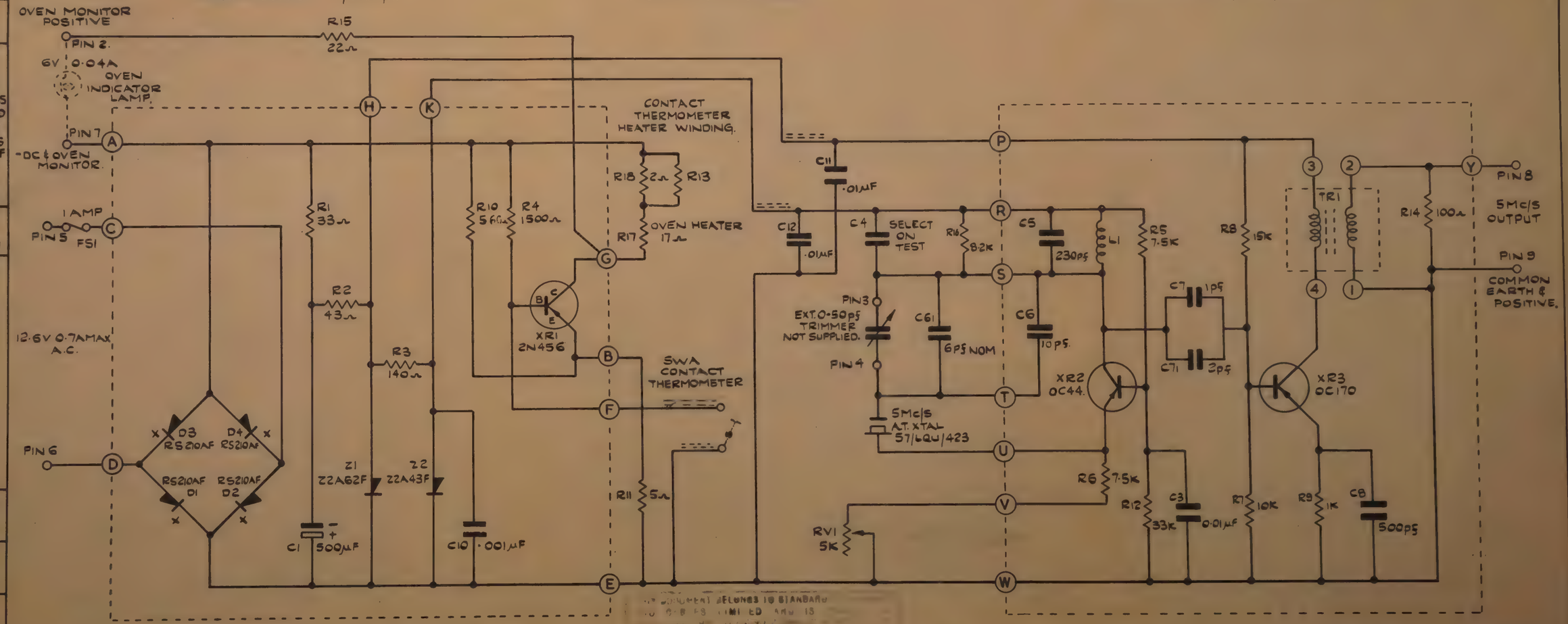

NOTES:- 1, R13 CONTACT THERMOMETER HEATER SHUNT, WHERE REQUIRED.
2, FERROXCUBE BEADS INDICATED THUS ≡≡≡

THIS DOCUMENT BELONGS TO STANDARD TELEPHONES AND CABLES LIMITED AND IS LOANED SUBJECT TO THE CONDITION THAT IT IS NOT TO BE COPIED IN WHOLE OR IN PART OR USED FOR TENDERING OR MANUFACTURING PURPOSES EXCEPT UNDER WRITTEN AUTHORITY

TITLE.	DRAWING No.	SHT. No.
TRANSISTORISED SOURCE CIRCUIT DIAGRAM	90/LQE/812A	7·1

ISSUE
ISSUE 2 28·12·61
APPROVED
CHECKED
TRACED
DRAWN ARM

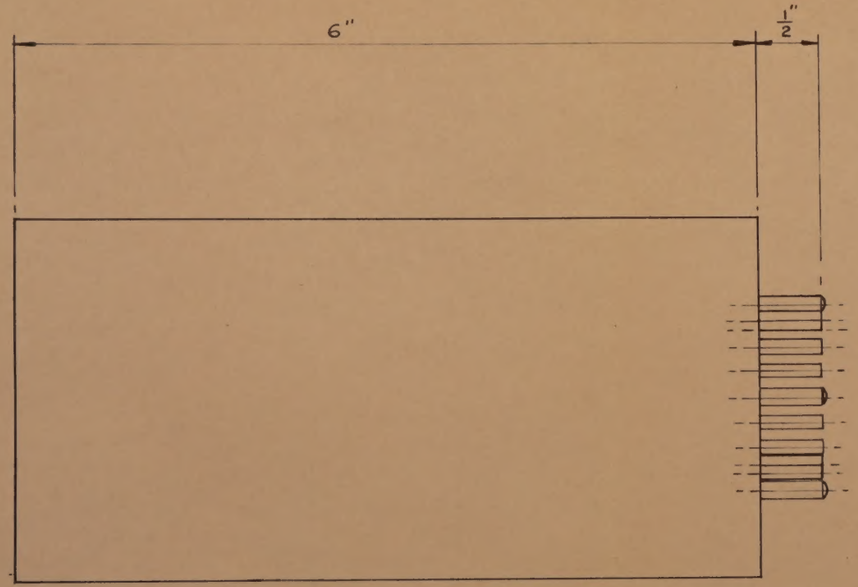

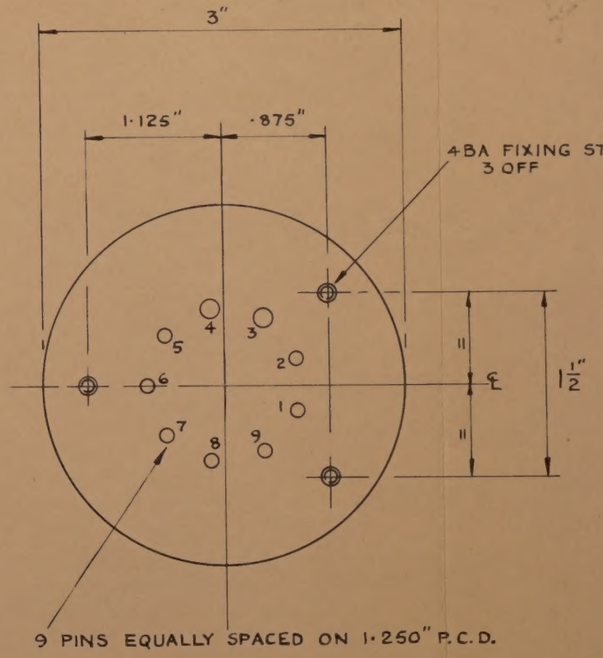

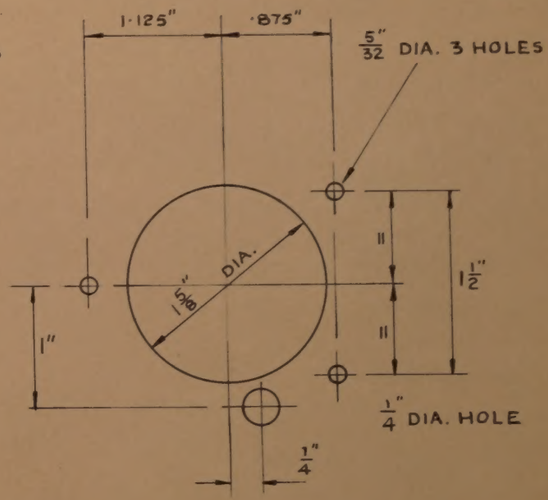

CHASSIS CUT-OUT

1 — SPARE
2 — OVEN MONITOR
3 — PULLING CAPACITOR
4 — PULLING CAPACITOR
5 — 12·6V
6 — 12·6V
7 — -DC & OVEN MONITOR
8 — OUTPUT
9 — COMMON EARTH & +DC

TITLE	DRAWING NO.	SHT. NO.
FIXINGS & PIN CONNECTIONS FOR 90/LQE/812A	90/LQE/812A	10·1

www.manualsplus.com
1004121